COWLES FOUNDATION FOR RESEARCH IN ECONOMICS

AT YALE UNIVERSITY

Box 2125, Yale Station
New Haven, Connecticut 06520

COWLES FOUNDATION DISCUSSION PAPER NO. 715

Note: Cowles Foundation Discussion Papers are preliminary materials circulated to stimulate discussion and critical comment. Requests for single copies of a Paper will be filled by the Cowles Foundation within the limits of the supply. References in publications to Discussion Papers (other than mere acknowledgment by a writer that he has access to such unpublished material) should be cleared with the author to protect the tentative character of these papers.

STRATEGIC MARKET GAMES:

A DYNAMIC PROGRAMMING APPLICATION TO MONEY, BANKING AND INSURANCE

Martin Shubik

October, 1984

STRATEGIC MARKET GAMES:

A DYNAMIC PROGRAMMING APPLICATION TO MONEY BANKING AND INSURANCE*

by

Martin Shubik

1. STRATEGIC MARKET GAMES AND DYNAMIC PROGRAMMING

A series of models are described and problems are posed below pertaining to a dynamic economy with various possibilities for the issue of fiat money, credit and insurance.

The models and notation are kept at their simplest in order to stress the structure of the models and the nature of the questions. At first glance, the nature of the introduction of money, the bankruptcy law, the price of capital and the money rate of interest may seem simplistic or contrived. The justification for this type of modelling is sketched below. The simplifications all go in the direction of extreme parsimony in description.

The general equilibrium model of production and exchange as presented by Debreu (1959) is not merely nonstrategic, it has no role for money or the financial institutions which characterize any modern economy. It is possible to recast the Debreu model as a strategic market game. But in doing so rules of the game must be specified and these amount to describing

*This work relates to Department of the Navy Contract N00014-77-C-0518 issued by the Office of Naval Research under Contract Authority NR 047-006. However, the content does not necessarily reflect the position or the policy of the Department of the Navy or the Government, and no official endorsement should be inferred.

The United States Government has at least a royalty-free, nonexclusive and irrevocable license throughout the world for Government purposes to publish, translate, reproduce, deliver, perform, dispose of, and to authorize others so to do, all or any portion of this work.

the rudimentary economic and financial institutions of society. This has been discussed in detail elsewhere (Shubik, 1973, 1975, 1978).

A simple example of an exchange economy with n individuals exchanging m commodities via m markets utilizing a commodity money to facilitate exchange is now described (for full detail see Shapley and Shubik, 1977).

A useful way to proceed with the modelling is to consider how to design a parlor game which could be played with reasonable ease by a group of individuals wishing to exchange various commodities. I stress that by considering the logic of game design our task is made easier than if we worried about the realism of the particular method for price formation. Dubey, MasColell and Shubik (1980) have shown that in large markets many mechanisms may lead to the same outcome that we wish to consider as a solution.

Suppose that there are n individuals, each individual i has an endowment of $m+1$ goods $(a_1^i, a_2^i, \ldots, a_{m+1}^i)$. The $m+1^{st}$ good is used by all to buy all other goods in exchange. By convention we set its price $p_{m+1} = 1$. Each individual i has a concave differentiable utility function for any bundle of goods. This is denoted by $\varphi_i(x_1^i, \ldots, x_{m+1}^i)$. We assume $\partial\varphi_i/\partial x_{m+1}^i > \varepsilon$, where ε is some small positive constant.

There are m markets at which any one of the first $j = 1, \ldots, m$ commodities can be bought for money. A strategy by an individual i could be a vector of dimension $2m$ where the first m numbers $q_1^i, \ldots, q_m^i$ are amounts offered for sale and the second m numbers $b_1^i, \ldots, b_m^i$ are amounts of money bid by trader i for each good.

$0 \leq q_j^i \leq a_j^i$ for $j = 1, \ldots, m$ and $\sum_{j=1}^{m} b_j^i \leq a_{m+1}^i$, $b_j^i \geq 0$ are

conditions which state that an individual cannot sell more of a good than he owns and he cannot spend more money than he has.

Merely for purposes of simplification we can cut down the size of each individual's strategy by considering the game where all are required to offer everything for sale. Thus as is shown in Figure 1, at market j the amount for sale is $a_j = \sum_{i=1}^{m} a_j^i$. An individual i bids a vector $(b_1^i, \ldots, b_m^i)$, $\sum_{j=1}^{m} b_j^i \leq a_{m+1}^i$. Prices are formed in each market by divid-

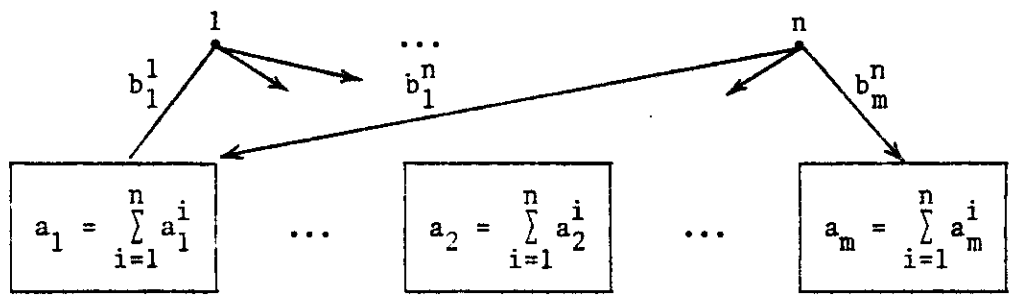

FIGURE 1

ing the total amount of money offered by the amount of good for sale. Thus

$$p_j = \sum_{i=1}^{n} b_j^i / a_j \quad \text{where} \quad a_j > 0 \quad \text{and} \quad j = 1, \ldots, m .$$

The amount of good j obtained by trader i after trade is

$$x_j^i = b_j^i / p_j .$$

After trade is over the manager of each market sends to each trader i the amount of money he has earned through the sale of his resources a_j^i . Thus each trader ends up with

$$x^i_{m+1} = a^i_{m+1} - \sum_{j=1}^{n} b^i_j + \sum_{j=1}^{m} a^i_j p_j \ .$$

It can be shown that for markets with many traders this game yields prices at the noncooperative equilibria which correspond to the competitive prices of the Walrasian model of the economy.

The points to stress here are that even though the game is extremely simple the rules describe the meaning of a market, price formation and the use of a commodity money. The model is for one period only and neither the concept of fiat money nor credit has appeared.

In order to extend our model to a multistage game concentrating our attention upon monetary and financial phenomena we consider strategic market games with only one real good to begin with.

2. A SIMPLE ECONOMY WITH FIAT MONEY AND NO CREDIT

Shubik and Whitt (1973) considered the following strategic market game with fiat money.

Each individual i has preferences of the form

$$u_i(\underset{\sim}{x}) = \sum_{k=0}^{k=n-1} \beta_i^k \varphi(x_k) \tag{2.1}$$

where n $(1 \leq n \leq \infty)$ is the number of periods and $\underset{\sim}{x} = (x_1, \ldots, x_n)$ is the vector of real goods consumed in successive periods. β_i is the "natural" discount factor for individual i. It might actually be a time discount factor or a linkage of the measure of concern between generations. Although we may impose $0 < \beta_i \leq 1$ its actual form and value is an empirical question.

They solved in detail the problem with two players and $\varphi_i(x) = x$.

The solution considered was an n-period strategy with the property that no individual acting alone could improve his payoff by altering his strategy.

Suppose each individual starts with an ownership claim of a fraction a_i of an amount of a commodity deposited in a central warehouse every period for sale. This economy which has m individuals uses paper or fiat money. Individual i begins with a fraction of the total money of $a_i + \gamma_i$ where $-a_i < \gamma_i < 1 - a_i$. Let b_i be the bid of i in the first of the n periods; then individual i has a payoff function defined recursively as:

$$(2.2) \quad u_n^i(a_i, \gamma_i) = \max_{0 \leq b_i \leq p_i + \gamma_i} \left\{ \varphi_i [K^i(b_1, \ldots, b_m)] + \beta_i u_{n-1}^i (a_i, \gamma_i - b_i + a_j \sum_{j=1}^{m} b_j) \right\}$$

where

$$x_i = K^i(b_1, \ldots, b_m) = \begin{cases} \dfrac{b_i G}{\sum_{j=1}^{m} b_j}, & b_j > 0 \text{ for some } j \\ 0, & b_1 = \ldots = b_m = 0 \end{cases}$$

where G is the total amount of the real good for sale each period. The good cannot be stored. As in the model noted in Section 1 $\sum_{j=1}^{m} b_j / G = p$ can be interpreted as a price. It is the amount of money bid divided by the amount of good available.

With an infinite horizon and discounting instead of (2.2) we could write a forward equation

$$(2.3) \quad u^i(a_i, \gamma_i) = \max_{b_{it}, t \geq 1} \sum_{k=1}^{\infty} \beta_i^{t-1} \varphi_i [K^i(b_{1t}, \ldots, b_{mt})]$$

where $\quad b_{it} \leq a_i + \gamma_{it}$

and $\gamma_{i,t+1} = \gamma_{it} - b_{it} + a_i \sum_{j=1}^{m} b_{it}$.

We considered state strategies. The problem to be solved was to see how the paper money flow could adjust over time given initial values of γ_i other than zero. For a value of zero it is easy to see that for $\beta_i = \beta$ a completely stationary static strategy exists with $b_{it} = a_i$, all spend everything and get back the same incomes.

Limiting our concern to $m = 2$, $1 \leq n < \infty$, $\varphi_i(x) = x$ and setting $G = 1$ without loss of generality and starting player I (II) with a larger (smaller) percentage of fiat money than his ownership, Shubik and Whitt (1973) established

Theorem 1. *A noncooperative equilibrium solution exists.*

Theorem 2. *It is unique for* $\beta_1 = \beta_2$ *(and for some other conditions).*

Theorem 3. *The second player always spends all of his money each period.*

A measure of the gain in value by player I due to money in excess of his goods ownership claim was also obtained. For many small players and quite general concave utility functions then for a sufficiently large number of periods there exists an equilibrium where each individual spends all his money each period. With a finite horizon this is unique.

Intuitively more competitors of roughly the same financial size weaken a rich individual's ability to control price and as m grows the speed increases at which money wealth will line up with claims to income due to ownership of real resources.

In this model paper money is worthless at the end of the game. Hence for the finite game we know all is spent at the end. In this formulation all started with a given issue of money and there was no credit. A problem

in modelling appears if credit is introduced. Is it to be paid back at the end? What happens to the player if he is unable to pay it back?

Heuristically we can see that credit weakens the power of the initially powerful player. If all borrow and spend the price system inflates and the relative advantage of the rich is diminished.

Other problems appear however. If credit is free and need not be paid back the problem is unbounded. Thus we must either limit lending or introduce a "bankruptcy" penalty levied against those who fail to pay back what they have borrowed at the end of time. This is easy to define for the finite horizon but poses problems for the infinite horizon.

Another problem in modelling concerns the specification of the terms of the loan. If an individual chooses to borrow $1 today when is he required to pay it back and how much is he required to pay? The payment of a money rate of interest for loans has been a fact of life since recorded history. But is a money rate of interest a logical necessity or a central variable of a government or an intermix of both?

2.1. Perfect, Markovian and Threat Equilibria

The backward solution of a finite dynamic program has as its analogue a perfect equilibrium* in multistage games. Unfortunately there is little guarantee that such a pure strategy perfect equilibrium exists in even a simple repeated market, but other simpler equilibria may exist (see Dubey and Shubik, 1978). Fortunately it can be shown that for multistage strategic market games with a continuum of players and no large players pure strategy perfect equilibria will exist (see Dubey and Kaneko (1984)). Thus we could

*A perfect equilibrium is an equilibrium in all subgames (see Shubik, 1982, Ch. 9). There are unfortunately difficulties with the backward induction if the equilibria are not unique.

view such a game as a set of parallel dynamic programs underlinked by commonly determined prices.

When only a few players are considered, depending upon the information conditions it is easy to construct games with many complicated threat equilibria. Uniqueness of equilibria is, if anything, a rarity. It may be possible to prove that one can find a simple state dependent set of strategies which form a noncooperative equilibrium, but this does not rule out equilibria utilizing classes of more complicated yet feasible strategies.

3. AN ECONOMY WITH UNCERTAINTY, FIAT MONEY, CREDIT OR INSURANCE

In recent years there has been considerable interest in financial economics in one person optimal consumption and investment processes involving uncertainty. The one person finite and infinite horizon problems can be stated as follows:*

$$(3.1)\quad V_1(s) = \varphi(s)\ , \quad s \geq 0$$

$$V_n(s) = \max_{0 \leq a \leq s} \{\varphi(a) + \beta E V_{n-1}((s-a)Z_{1m} + Z_{2n})\}\ , \quad s \geq 0\ , \quad n \geq 2$$

where n is the number of periods remaining, s is current wealth, $\varphi(\cdot)$ is a strictly concave one-period utility function, a is the level of consumption, β the discount factor,

*The following formulations follow those of Ward Whitt (1975a, b, c, d) in a series of preliminary papers.

Z_{1n} is a nonnegative random variable describing the rate of return on savings in period n.

Z_{2n} is a nonnegative random variable describing non-investment income in period n.

If the horizon were infinite and there were many investment opportunities, instead of (3.1) we have:

$$V^*(s) = \max\{\varphi(a) + \beta EV^*(\sum_{i=1}^{k} Z_i(b_i) + Y)\} \tag{3.2}$$

where the maximum extends over all nonnegative vectors $(a, b_1, b_2, \ldots, b_k)$ such that $a+b_1 + \ldots + b_k = s$. Z_i for $i = 1, \ldots, k$ is the random income from investment i and Y is other income.

Under the appropriate conditions it has been shown that for the infinite horizon problem there is an optimal policy which depends solely upon current wealth.

3.1. An Economy with Fiat Money and Many Traders

Suppose that there is a continuum of traders each with initial wealth s. If p is the price for the one nondurable good which holds for all future periods then the dynamic program faced by a representative individual is:

$$V(s,p) = \max_{\substack{a,b_1,\ldots,b_k \geq 0 \\ a+b_1+\ldots+b_k=s}} \{\varphi(a/p) + \beta EV(\sum_{i=1}^{k} b_i Z_i + Y, p)\} \tag{3.3}$$

where a is the money spent on consumption and b_i the level of investment income in i and Y is noninvestment income. $V(s,p)$ is the utility

associated with an initial wealth s and an optimal policy given a price level p. Although we assume that the discount factor, utility function and investment opportunities and income β, φ, and $(Z_1, \ldots, Z_k, Y)$ are the same for all agents, their wealth s will vary. Traders are differentiated only by their wealth. Thus we may consider a probability measure μ defined on $[0,\infty)$ which specifies the proportion of traders with a given wealth.

The average amount of money held by a trader in the system is

$$(3.4) \qquad M = \int_0^\infty s d\mu(s) \ .$$

If $a^*(s,p)$ is the amount a trader with wealth s would spend on consumption if price is expected to be p then

$$(3.5) \qquad M(p) = \int_0^\infty a^*(s,p) d\mu(s)$$

is the mean amount of money spent for consumption. Let $G(p)$ be the mean amount of good offered if price is expected to be p with clearing markets and accurate predictions

$$(3.6) \qquad p = M(p)/G(p) \ .$$

A basic question to ask is will there be a stationary competitive equilibrium for this closed economy determined by $(\varphi, \beta, Z_1, \ldots, Z_k, Y)$ which can be characterized by $(\mu, p, a^*, b_1^*, \ldots, b_k^*)$ such that $(a^*, b_1^*, \ldots, b_k^*)$ is the optimal policy for (3.3). Whitt (1975d) with some qualifying assumptions was able to prove the existence of a stationary equilibrium.

As our concern is with monetary phenomena we must take care to conserve fiat money each period or to be explicit as to how more fiat is issued into the economy.

A key mathematical difficulty in these models concerns the treatment of an uncountable number of random variables. (See Whitt, 1975b, Dubey and Shapley, 1977, Lucas, 1980, Bewley, 1982.)

A trivially simple example which can be solved by inspection may help the intuition.

Suppose all individuals have $\varphi(x) = x$ where x is the amount of the single consumer good consumed. There are no investment opportunities and Y is an individual's periodic income in terms of the amount of commodity he offered for sale during the period multiplied by price. This is the "sell-all" model described in Section 1 and in the Shubik-Whitt (1973) analysis. Here however income is a random variable. We assume that an individual's ownership claim to goods offered for sale is given by a rectangular distribution on the interval [0,2]. The initial cumulative distribution of fiat money is as shown in Figure 2.

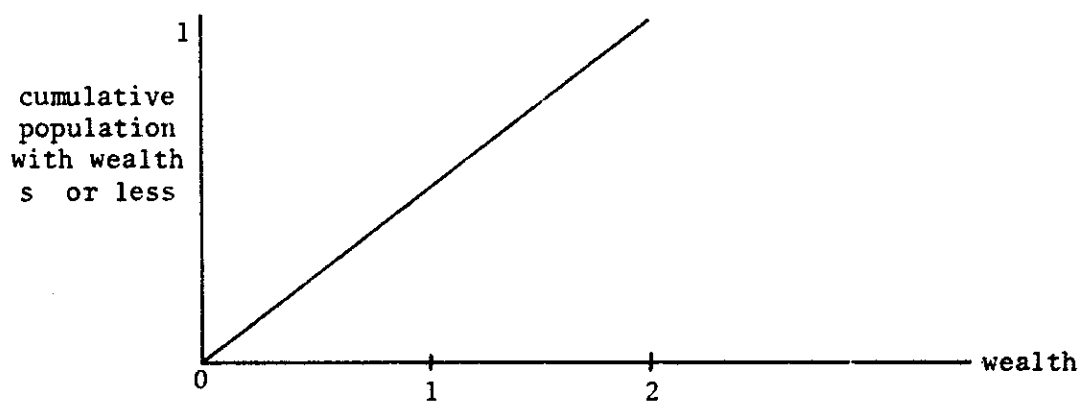

FIGURE 2

The optimal policy for all traders is to spend everything thus the mean amount of money spent is $M(p) = 1$, but the mean amount of good offered

for sale is 1 hence $p = 1/1 = 1$ gives us the price for the stationary equilibrium.

Here with this optimal policy of bidding all your wealth, then at each period the distribution of wealth in the population is bounded and maps into itself. This maintains the stationarity.

Robinson Crusoe, Markets and Insurance

From the theorem of Whitt (1975d) we can consider several aspects of the role of fiat money as a provider of insurance. A heuristic sketch is given here. There are three cases which must be compared, they are: (1) Robinson Crusoe or the single individual, (2) Individuals using markets and fist money without credit or insurance, and (3) Full insurance.

(1) Robinson Crusoe: An individual trying to maximize $\sum_{t=0}^{\infty} \beta^t \varphi(x_t)$ with a random income of the real good or "manna" each period with no storage possibilities has no decision problem. He eats what he gets each period. If his income Y is distributed as $\eta(x)$ then his expected payoff is

$$\sum_{t=0}^{\infty} \beta^t \int_{x=0}^{\infty} \varphi(x)\, d\eta(x) \ .$$

(2) Markets and Fiat Money: The presence of a mass of individuals using an anonymous market converts the Robinson Crusoe problem into a decision problem where the market provides a law of large numbers for trade but no income. With a stationary equilibrium each individual appears to face an isolated dynamic program as price and market supply appear to be fixed. In general if $\varphi(\cdot)$ is strictly concave, if the total amount of money issued at the start is M then some function α of the fiat money will be hoarded as this is the way the individual achieves his limited insurance protection.

(3) Insurance: An alternative way for this society to organize is for them to form a common insurance pool. In this case there would be a stationary competitive equilibrium where each individual starts with the same amount of money, exchanges his future income for a policy which guarantees him an equal share of market income and spends everything. Thus the payoff to each individual will be

$$\sum_{t=0}^{\infty} \beta^t \varphi(\bar{x}) = \frac{\varphi(\bar{x})}{1 - \beta}$$

where $\bar{x}$ is the average real income per period.

If we had started the society with the same amount of fiat money as we did in the previous case, the stationary price level would be higher as no money would remain in hoard.

Both in cases (2) and (3) some modelling details concerning financial institutions must be settled. In case (2) it must be stressed that in this example not only is there no borrowing, but wealth kept in cash earns no money rate of interest. The money supply stays constant and there is no banking. In case (3) the insurance arrangement can be viewed as a large cooperative which could even be formed before the game. No profit maximizing insurance company is envisioned.

3.2. Two Types of Traders

Suppose that we were to consider an economy with two types of traders, half are risk neutral and half are risk averse. Then if there is a stationary state the price level and the amount of money in hoard must be as follows: Suppose that the average amount of money and consumption good or manna are one unit per person. Let the stationary price be p^*, then as all have the same expected income, price is constant and each class must

spend the same amount, if the total fiat money issued were $M = 1$ then it must be distributed as $(1 - .5p^*)$ to the risk averse and $.5p^*$ to the risk neutral who spends all. Each spend $.5p^*$ but the risk averse hoard $1 - p^*$.

3.3. Fiat Money, Time Discount and Insurance

When $\beta < 1-\varepsilon$ and a stationary equilibrium exists the initial non-symmetric distribution of money may have a significant effect on the distribution of returns to the traders as the first term of $\sum_{t=1}^{\infty} \beta^t \varphi(x_t)$ will always form a significant fraction of total return if the consumption in each period is bounded. Intuitively it appears that as β approaches 1 this advantage would diminish. We would also suspect that the self-insurance obtained from wealth would become closer to full insurance as $\beta \to 1$ as the individual could make better use of a serial law of large numbers on his income. Bewely (1982) has discussed the relationship between insurance and self-insurance.

4. CREDIT, BANKING AND BANKRUPTCY

4.1. Models of Credit Granting Arrangements

In the original model of trade with fiat money investigated by Shubik and Whitt (1973) there was no exogenous uncertainty nor was there any borrowing or lending. It is possible to introduce borrowing and lending in at least four different ways, each of which has a historical counterpart. They are:

(1) Individual pairwise credit arrangements
(2) A mass money market
(3) Inside, or commercial banking
(4) Outside or central banking.

In virtually all modern economies there has been a blend of all of these. In small communities, or among families and friends individual i may grant a credit to individual j. A debt instrument in the form of an I.O.U. note or formal contract is created and payment may be in goods or fiat money or gold. Such arrangements are highly institutional and require detailed modelling. They are discussed no further here.

For a mass money market we may consider a society in which an initial issue of fiat money (which is the only legal tender) has taken place; there is however not merely a set of markets to exchange goods for money but also a mass market in which those with surplus fiat money can exchange it for promisary notes. Referring to the model in Sections 1 and 2, a move by an individual i in any period is now not merely a bid b_j^i for good j but also an offer of fiat money in exchange for I.O.U. notes or vice-versa as shown in Figure 3.

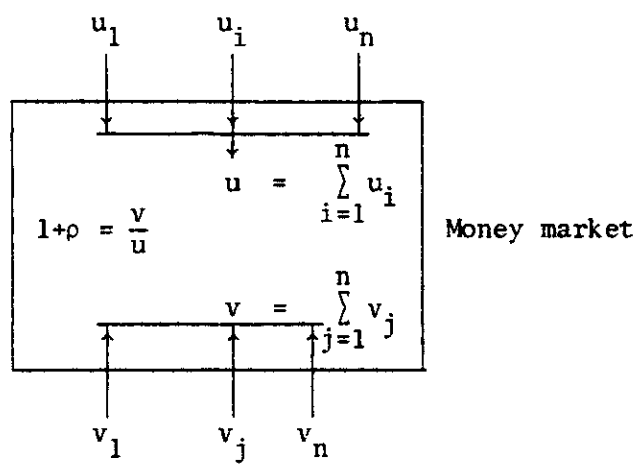

FIGURE 3

Housman (1983) has considered this type of market. We note that u_i is the amount of fiat offered by individual i. Individual j creates a new financial instrument which is a promise to pay a certain amount of fiat money at a specific date, say one period hence. If v_j is the amount

of fiat to be paid back next period then an endogenous money interest rate appears defined by $1+\rho = v/u$.

The distinction between a commerical bank or money market comes in the specification of liabilities. In bilateral borrowing and lending the liability is between i and j . In a mass money market, the market serves as a broker and aggregating device. One individual may borrow from or lend to many. Thus those liable or in part liable to lender i may consist of a group of borrowers matched with i .

The matching problem could cause legal and administrative problems which can be ameliorated by having the bank issue its own I.O.U. notes to all lenders (bank depositors) and take responsibility for all buyers of funds (borrowers).

In all of the three arrangements noted above the amount of fiat money originally issued is constant. A new financial instrument the I.O.U. note is created but depending upon the rubs of the game it may or may not be used in place of fiat money. The bank (unless it is granted special privileges) is nothing more than an aggregating device which also lumps liabilities together.

We could also envision a society with a central bank which could exogenously set a money rate of interest ρ and act as a bank of issue and deposit if it chose, i.e., it could issue extra fiat money (change the money supply) and could accept deposits. In short, we can introduce a special player with power to set ρ as a central variable and to manipulate the fiat money supply. If we introduce this new player we have to either give it a fixed strategy or to specify its goals or utility function and strategy set.

4.2. Limited Lending, Secured Loans and Bankruptcy

As soon as we introduce credit, not only must liability relations be specified but what happens if an individual is unable to meet his obligations must be made explicit. There are several ways to model this, each of which has a counterpart in financial practice and leads to a different mathematical model.

(1) Limited Lending and Garnishing Income: There are two easy to describe lending policies which can be mathematized. The first places an arbitrary but conservative bound on the amount to be lent to any individual for a specified length of time and the second relates lending to expected income. In each instance as soon as the borrower hits his upper bound his further income is paid to the lender until the debt is fully repaid.

(2) Secured Lending: If assets are an explicit part of the model and they can be traded directly then lending can be secured by the assets. This is in essence the same as the garnishing of income. The difference is in institutional detail concerning how the lender uses income or assets to protect against default.

(3) Bankruptcy Penalty: We may model unsecured lending by introducing an explicit bankruptcy penalty into the utility function. It may have a noneconomic component involved such as social stigma, exile, going to jail, or other legal and social sanctions against those who fail to pay their debts.

4.3. The Power, Social and Private Purpose of Central and Commercial Banking

The monetary and credit system of an economy is a central mechanism that enables a society to exert influence on the economy. As a good first approximation, paper per se is worthless. Thus at the end of time there is no overwhelming need to have the government's books balance. The central

bank is not necessarily a profit maximizer. If not then what should its goal be? We have seen in Section 3 that up to a point that fiat money provides for self-insurance, but an insurance company or agency could do as well or better.

If borrowing and lending is permitted then if there is a nonzero money rate of interest the amount of fiat in circulation can only be conserved by an internal money market or by an inside bank, i.e. a bank which can only lend what it borrows. If the bank's I.O.U. notes can be used instead of fiat money then we have permitted it to "create money" unless it is required to hold 1 unit of fiat money in its vaults for every I.O.U. for 1 unit of money it issues.

Presumably an inside or commercial bank is profit maximizing, but if it pays the same money rate of interest on deposits as it charges on loans and is not permitted to create money then (ignoring administrative costs) at best it can break even.

The goals and strategy set of a central bank are a matter of public policy. For example in the relatively simple models discussed here we could give the central bank control of the money rate of interest ρ , permission to issue any amount of fiat money* in response to loan demands, ability to set a limit to borrowing by any individual and to garnish or capture future income until repaid. The goal of the bank in a society with only one type of individual can be well defined. It wishes to maximize the expected utility of the representative trader. A specific example of a central bank and a group of traders is provided.

For illustration we compare a simple instance of equation (3.3) where

---

*Fiat money may be regarded as nothing more than a noninterest bearing I.O.U. note of the government.

only fiat money is used with the same economic background plus an altruistic central bank.

Suppose all individuals wish to maximize $\sum_{t=0}^{\infty} \beta^t \varphi(x_t)$ where β is the natural discount factor, $\varphi(\cdot)$ the per period utility function and x_t the amount consumed in period t. Suppose that each individual is the owner (with probability of 1/2 in each instance) of 0 or 2 units of the consumer good. It is sold in the market and he obtains an income of 0 or $2p_t$ from the proceeds of the sale. He obtains the income at the start of $t+1$ and p_t is the price during t. If there is a stationary solution (3.3) becomes

$$(4.1) \qquad V(s,p) = \max_{a \leq s} \left\{ \varphi(a/p) + \frac{\beta}{2}[V(s, -a, p) + V(s-a+2p,p)] \right\}$$

where s is the wealth of the trader and a is the amount spent on the consumer good, $s \geq 0$ and $a \geq 0$.

This must be contrasted with the new problem. Let ρ be the money rate of interest paid or charged by the central bank. Let D be the largest indebtedness permitted by the bank prior to its appropriation of all future income until interest and principal have been repaid. The individual faces:

$$(4.2) \quad V^*(s,p) = \max_{a \leq \max[0,s+D]} \left\{ \varphi(a/p) + \frac{\beta}{2}[V^*((s-a)(1+\rho), p) + V^*((s-a)(1+\rho)+2p,p)] \right\}$$

Can the bank select values for ρ and D such that there is a solution to (4.2) which gives a higher mean expected return than (4.1)?

Are there nonstationary solutions, say inflationary, where the introduction of the central bank selecting ρ and D will be superior to the stationary solution to (4.1)?

4.4. Further Directions

The impacts of dynamic programming and game theory are beginning to be felt in the development of economic theory. The blending of both poses many intrinsically hard problems. The concept of a dynamic game with a continuum of players offers the possibility for the development of models suited to the exploration of the role of money and financial institutions in the control of a mass economy.

The relationship between games with a large finite number of players and a continuum still needs some exploration as does the treatment of bankruptcy penalties in finite and infinite horizon models.

REFERENCES

Bewely, T. (1982), "Stationary Monetary Equilibrium with a Continuum of Independently Fluctuating Consumers,"

Debreu, G. (1959), Theory of Value, New York: Wiley.

Dubey, P., and M. Kaneko (1984),"Information Patterns and Nash Equilibria in Extensive Games," Mathematical Social Sciences, forthcoming.

Dubey, P., A. MasColell, and M. Shubik (1980), "Efficiency Properties of Strategic Market Games," Journal of Economic Theory, 22, 2, 339-362.

Dubey, P. and L. S. Shapley (1977), Noncooperative Games with a Continuum of Traders," CFDP 477.

Dubey, P. and M. Shubik (1978), "On 'On the Foundations of the Theory of Monopolistic Competition,'" CFDP 484.

Lucas, R. (1980), "Equilibrium in a Pure Exchange Economy," in Models of Monetary Economics, J. Kareken and N. Wallace, eds., Fed. Res. Bank of Minnesota, 131-145.

Housman, D. L. (1983), Some Noncooperative Game Models of Exchange, Ph.D. Thesis, Cornell University.

Shapley, L. S. and M. Shubik (1977), "Trade Using One Commodity as a Means of Payment," Journal of Political Economy, 85, 5, 937-968.

Shubik, M. (1973), "Commodity Money, Oligopoly, Credit and Bankruptcy in a General Equilibrium Model," Western Economic Journal, 11, 1, 24-38.

_____ (1975), "On the Eight Basic Units of a Dynamic Economy with Spot and Futures Markets," Review of Income and Wealth, 21, 2, 183-201.

_____ (1978), "A Theory of Money and Financial Institutions," Economic Applique, 31, 1&2, 61-84.

_____ (1982), Game Theory in the Social Sciences, Vol. 1, Cambridge: M.I.T. Press.

_____ and W. Whitt (1973), "Fiat Money in an Economy with One Nondurable Good and No Credit" in A. Blaquiere (ed.), Topics in Differential Games, Amsterdam: North-Holland, 401-448.

Whitt, W. (1975a),"Optimal Consumption under Uncertainty: Finite Horizons," Preliminary Paper, Yale University, School of Organization and Management.

_____ (1975b), "Consumption and Investment under Uncertainty over an Infinite Horizon," Preliminary Paper, Yale University, School of Organization and Management.

_____ (1975c), "Consumption and Investment under Uncertainty: The Wealth Stochastic Process," Preliminary Paper, Yale University, School of Organization and Management.

_____ (1975d), "Stationary Equilibria in an Economy with Money, Uncertainty Infinitely-Many Time Periods, and a Continuum of Traders," Preliminary Paper, Yale University, School of Organization and Management.